A Nidec Group Company
Nidec Motors & Actuators
All for dreams

Series GMPD
Motor type 404 764

Design Data	
Commutation	Brushed
Direction of rotation	Bi-directional
Bearing type	A:Sleeve - B:Sleeve

0320 AR

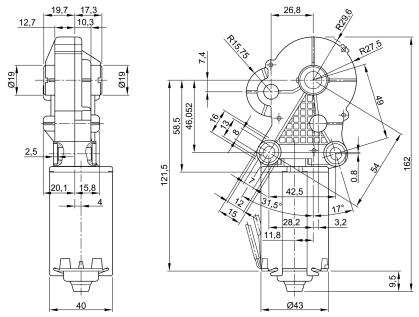

Performance data		
Rated voltage [V]	U_N	24
Nominal torque [Nm]	M_N	4.00
No-load speed [min^{-1}]	n_0	22.0
Nominal power [W]	P_N	7.54
Nominal current [A]	I_N	1.8
Nominal force [kN]	F_N	0.00
Duty cycle		s3

Sensor data	
Pulses	0
Output channels	0

Other data	
Gear ratio	210/1
Gear wheel material	plastic
Suppression components	7,5µH, 47nF, (0,47µF)
Enclosure class	IP 40
Weight [kg]	0.440

Remarks:

Motor picture

Characteristic curves

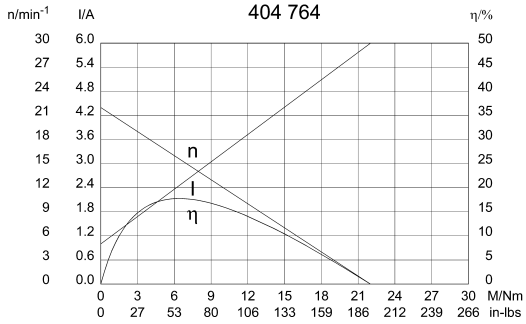

Output shaft drawing (W), Wiring diagrams (S) and Connector layout (K)

W 224

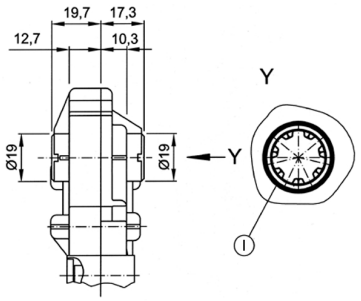

I through Profile KRC 316928 AEIZ 01

S 103

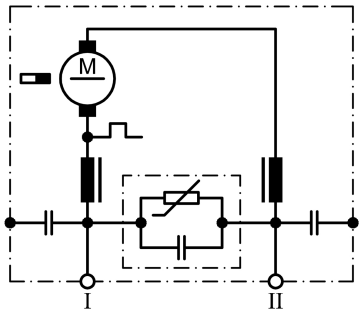

I Terminal 1, black
II Terminal 2, blue

K 227

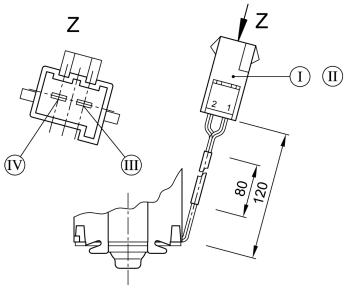

tap housing 365057-1, **timer contacts** 928781-5
mating with **receptacle housing** 365058-1,
timer contacts 927768-1
1 black motor, **2 blue** motor

NIDEC MOTORS & ACTUATORS
Europe: +49 7142 5083369 | North America: +52 656 629 3800
www.nidec-ma.com
sales@nidec-ma.com